P.A. – S.p.A. – EQUIPAGGIAMENTI TECNICI DEL LAVAGGIO
VIA MILANO, 13 – CASELLA POSTALE 115 – 42048 RUBIERA (REGGIO EMILIA) – ITALY
Tel. +39 0522 623611 – Fax. +39 0522 629600 – R.E.A. RE 156319 – R.I. RE11535 – Mecc. RE 013446
C.F. e P. IVA 01035950359 – Cap. Soc. i.v. € 750.000,00 – Codice Identificativo C.E.E. IT 01035950359
ART. 2497 – BIS C.C. DIREZIONE E COORDINAMENTO BENETTI srl R.I. TRIB. DI RE 01480690351
Web: http://www.pa-etl.it – **E-mail:** info@pa-etl.it

VEGA INOX Spray gun - 310 bar – 31 MPa (AISI 303)

Technical manual: **E 110**

Guns suitable for use up to 310 bar – 31 MPa rated pressure pumps.
No fluid passage upon trigger release.

DN10

- **30.3150.00** VEGA INOX G3/8 G1/4 FF
- **30.3150.50** VEGA INOX 3/8NPT 1/4NPT FF

- Covered by shockproof plastic semi-housings.
- Sst seat and ball.
- Internal structure Sst Aisi 303
- Ergonomic construction.
- Minimum fatigue for trigger opening and use.

TECHNICAL SPECIFICATIONS

P/N	RATED PRESSURE bar - MPa	PERMISSIBLE PRESSURE bar - MPa	MAX FLOW RATE l/min	(1) MAX TEMPERATURE °C	INLET OUTLET		WEIGHT gr
30.3150.00	310 - 31	350 - 35	40	160	G3/8 G1/4	FF	830
30.3150.50	310 - 31	350 - 35	40	160	3/8NPT 1/4NPT	FF	830

(1) The gun has been designed for continuous use, at a water temperature of 90°C (195°F). It can resist at the max temperature of 160°C (320°F) for short periods only, as, when the gun shuts off, the heater continues to transmit the heat to the water, thus increasing both temperature and pressure up to high, dangerous values.
Using the gun at a water temperature higher than 60°C involves for the operator the use of adequate safety devices, such as gloves, glasses, etc.

Instruction manual, maintenance, installation, spare parts. For a correct utilization, follow the directions of this manual **Re-print them on the Use and Maintenance booklet of the machine.**	n. 12.9110.00

DIMENSIONAL DRAWING

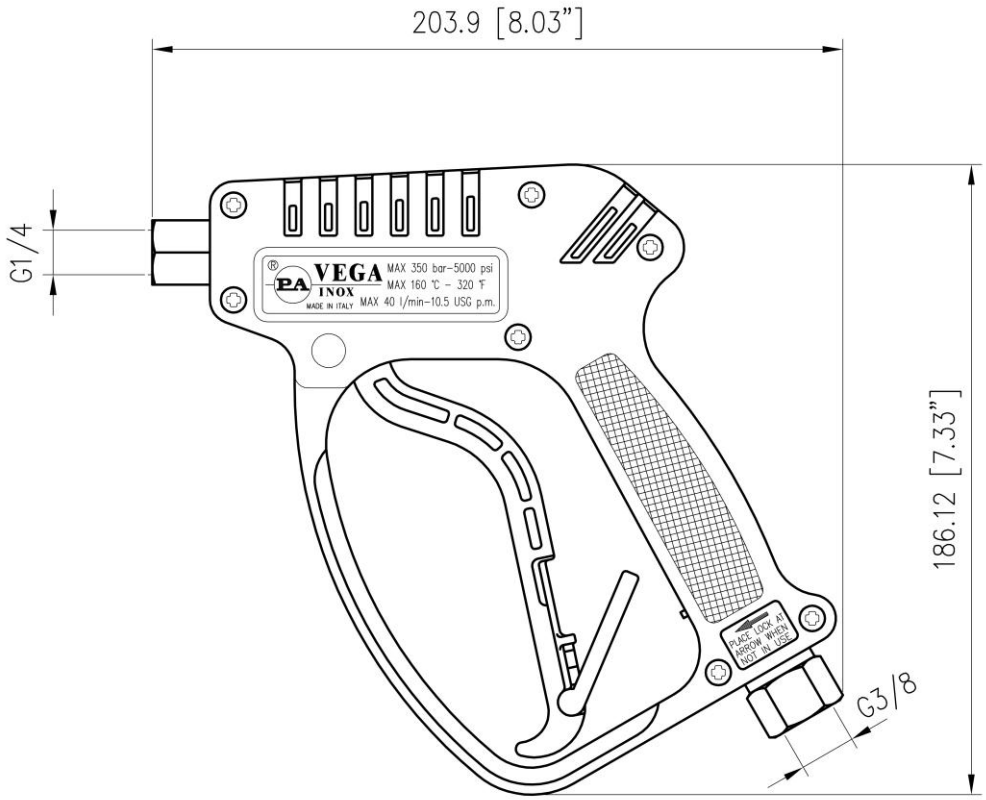

INSTRUCTIONS

This product is to be utilized with clean fresh water, even slightly additivated with normal detergents. For use involving different or corrosive liquids, contact the PA Technical department. Appropriate filtration should be installed when using unclean liquids. Choose the gun in line with the data of nominal running (system rated pressure, max flow and max temperature). In any case, the pressure of the machine should not exceed the permissible pressure rate imprinted on the gun.

INSTALLATION

This gun was designed to operate with **hot water** (in compliance with the technical specs). Provide the plant generating **hot water** with an equipment limiting the incidental increase of the fluid temperature.

Always fit a safety valve to protect the delivery conduct when the latter is under pressure.

Choose a suitable nozzle and ad just the valve mounted in the front of the gun, thus obtaining a constant supply and avoiding unpleasant pressure spike when closing the system.

If the nozzle wears out, the pressure falls. When you install a new nozzle, adjust the system back to the original pressure.

.

OPERATIONS

The gun opens and closes a high pressure conduct by means of a piston acting on a seat; the return is controlled by a spring which releases the trigger. **Attention: during pump activation always set the gun with its safety latch connected in order to prevent accidental openings.**

WATER HOSE FEED

By high or very unsteady pressure values on delivery, it is necessary to mount a pressure reducer , both to level the flow rate on delivery and to protect the system components.

PROBLEMS AND SOLUTIONS

PROBLEMS	PROBABLE CAUSES	SOLUTIONS
Leakage from the nozzle	Presence of impurities Gun seat worn out	Clean Replace the seat Fit adequate filters and/or check
Leaking seals	Seals worn out	Replace
Difficult trigger opening	High pressure inside circuit	Check the bypass valve and adjust it if necessary

REGULATIONS
The design and construction of our products comply with: norm CEI EN 60335-2-79 first edition, published in 1999-03 and its respective variations on the project norm prEN 1829.

Read this manual before starting the assembly.
For a correct utilization, follow the directions described in this manual and re-print them on the Use and maintenance manual of the machine.

The present manual is valid for all the guns named **VEGA INOX.**
SPARES
Use original PA spares only in order to get both a correct operation and a long lasting, reliable product.

MAINTENANCE
Maintenance has to be carried out by **Specialized Technicians.**

STANDARD: every 400 working hours (circa 10,000 cycles), check and lubricate the seals with water resistant grease.
SPECIAL: every 800 working hours(circa 20,000 cycles), check the wear of the seals and internal parts and if necessary, replace with original PA parts, taking care during installation to lubricate with water resistant grease.

CAUTION: re-assemble the gun restoring the original conditions.

The manufacturer is not to be considered responsable for damage as a result from incorrect fitting and maintenance.

Technical data, descriptions and illustrations are indicative and liable to modification without notice.